OUTWAY | H001E

LED High bay

· Die-casting Aluminum

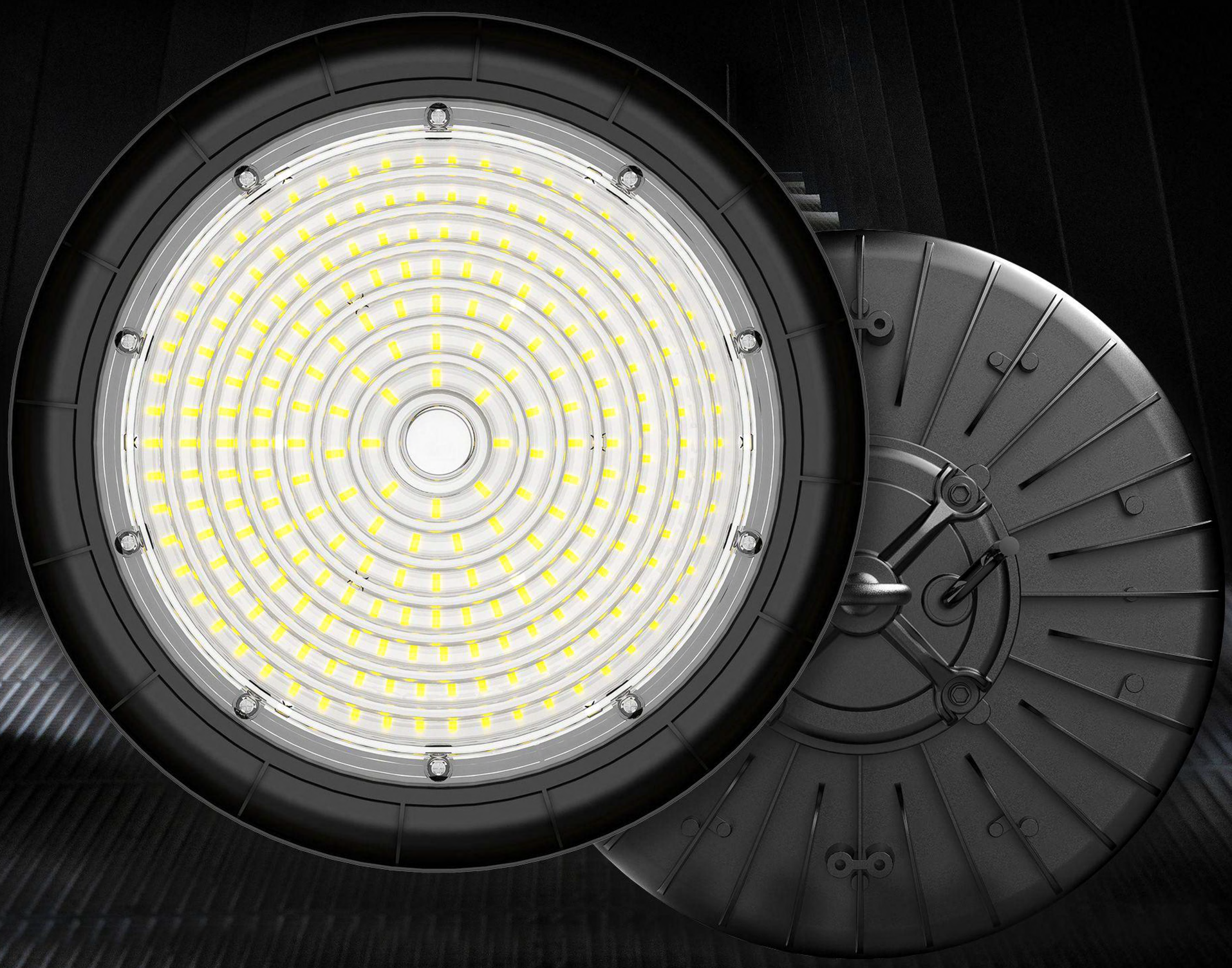

OUTWAY GROUP Lighting

OUTWAY

H001E

LED High bay

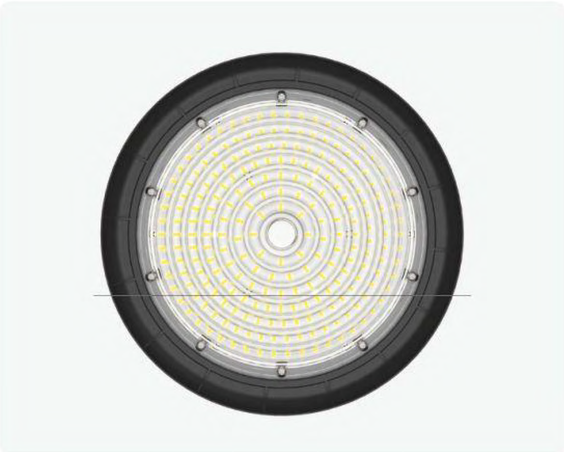

DIMENSIONAL LINE DRAWING

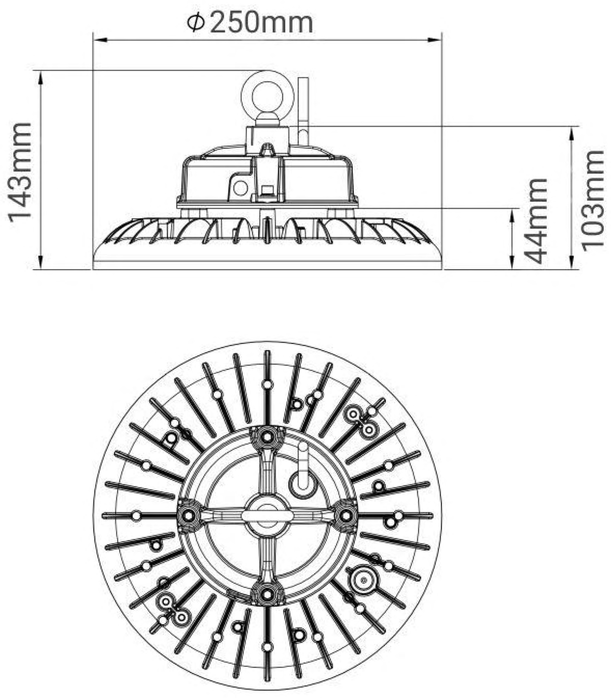

H001EI-100W

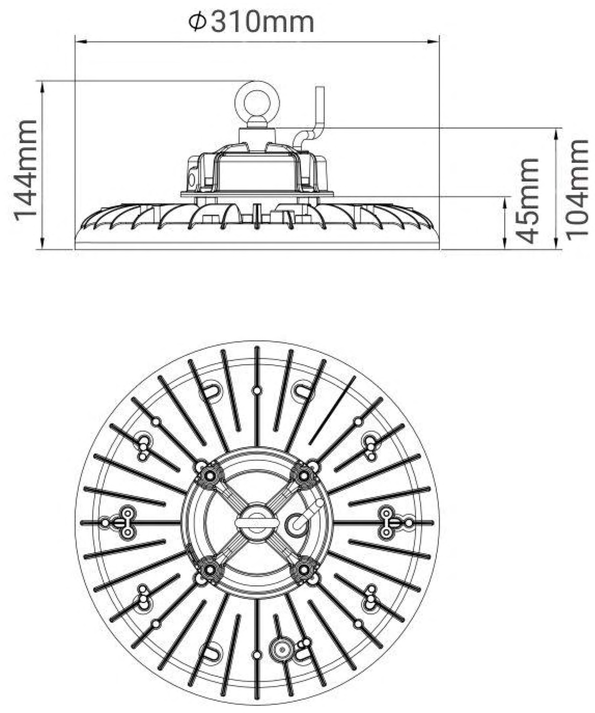

H001EI-150W

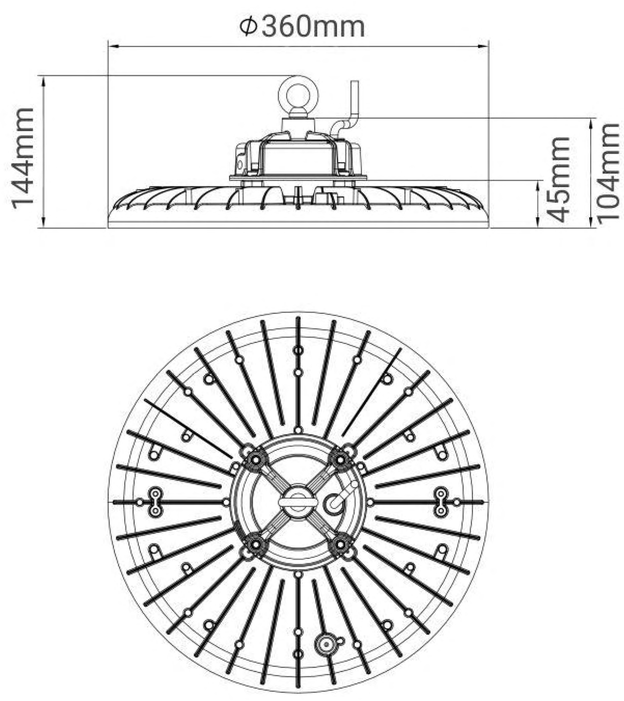

H001EI-200W

Input Voltage 100~240V

Frequency 50 / 60 Hz

CCT 6500K

CRI Ra70 (Ra80 optional)

Efficacy (±10%) 180LM/W

Beam Angle 120°

SPECIFICATION DIAGRAM

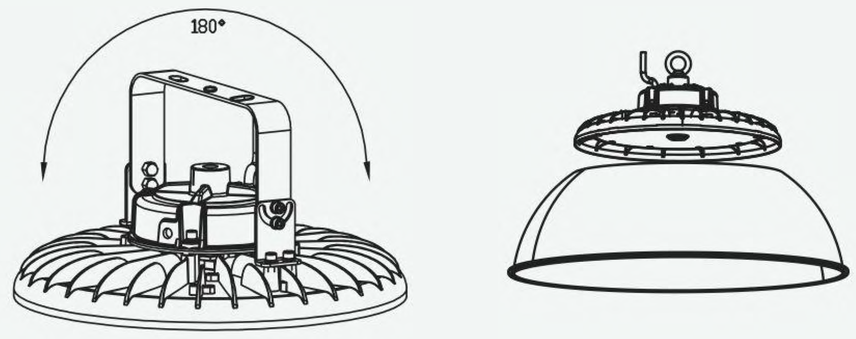

EMERGENCY POWER

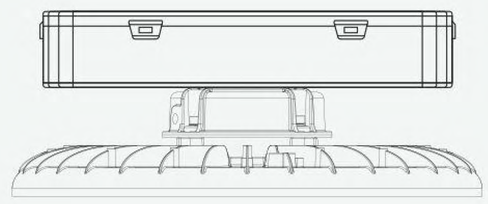

Emergency Power&Discharge Time:
5W:3H
10W:3H

Batteries:
5W:3.2V 6000mAh LiFePO4
10W:6.4V 6000mAh LiFePO4

PHOTOMETRIC DATA

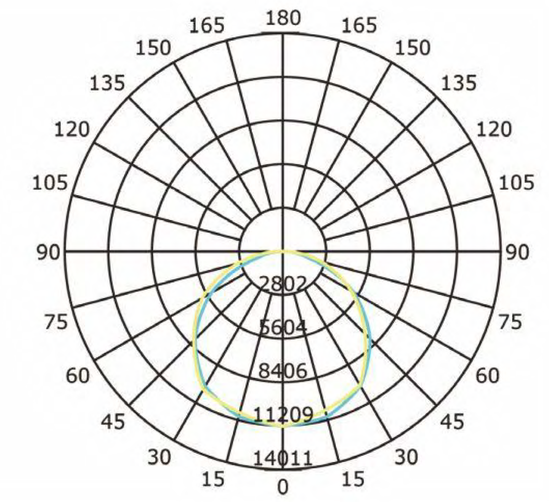

120°

HIGHLIGHTS

- Patent design, Strong heat dissipation capability.
- Meanwell driver,5 years warranty.
- High luminous efficiency, up to 180lm/w.
- Multiple light distribution 120°.
- Hook or bracket for mounting is optional.

APPLICATIONS

Factory Workshop

Indoor Playground

Indoor Swimming Pool

Indoor Basketball Court

Super Market

Warehouse

Exhibition Hall

GENERAL INFORMATION

Power	100W	150W	200W
LEDs Type &Qty	150pcs	225pcs	300pcs
Luminous Flux (±10%)	13000lm	19500lm	26000lm
Luminous Flux (±10%)	15000lm	22500lm	30000lm
Luminous Flux (±10%)	17000lm	25500lm	34000lm
Surge Protection	5KV		
Product Dimension (mm)	250×250×143	310×310×144	360×360×144

Efficacy (±10%)	170LM/W
Correlated Color	6500K
Color Rendering Index	Ra70 (Ra80 optional)
Beam Angle	120°
Power Supply	From SOSEN for consistent performance
Frequency	50 / 60 Hz
Input Voltage	120-240 VAC
Range of Voltage Acceptable	100-305 VAC
Power Factor	⩾0.95
Housing	Die casting aluminum
Optics	PC Lens
Finish	Powder Coating
Fixture Color	Black
IP Rating	IP65
IK Rating	IK08
Insulation class	Class I
Operating Temperature	−40°C to + 50°C
Life Time	〉54,000Hrs (Ta=30°C@L70)
Warranty	5 Years
Power cord	1.5M AU PLUG

- For environmental protection reasons, the products are designed to be low-carbon. From January 1, 2021, our company will no longer provide plastic bags for packaging by default, making a contribution to global low-carbon and environmental protection.
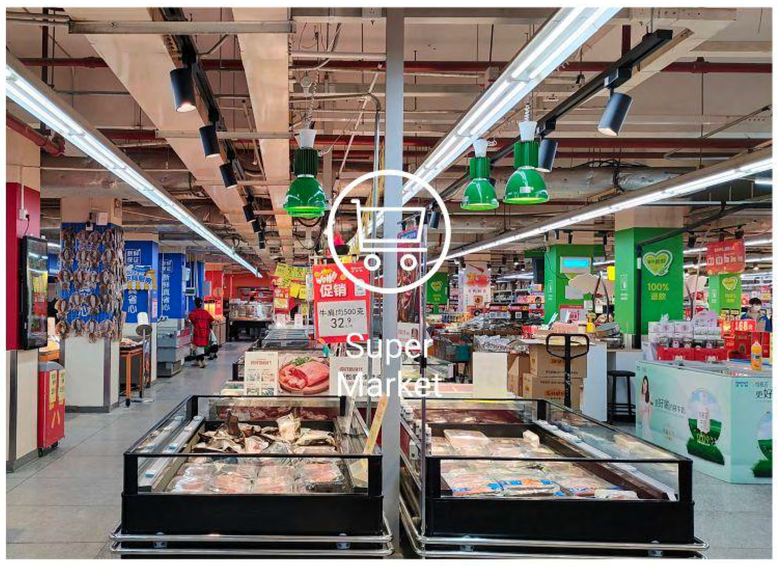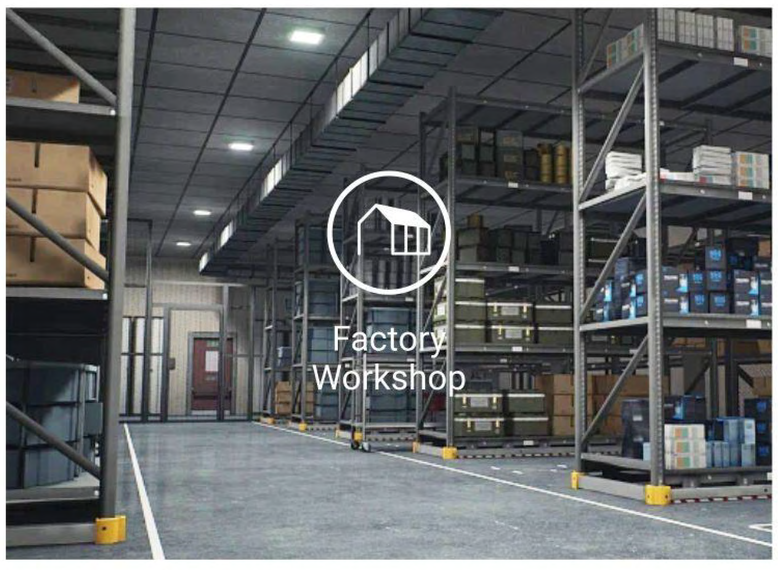
HIGHIGHTS